Pressure Reducing Valve

Model 42T

The BERMAD model 42T is an elastomeric, line pressure driven pilot operated pressure control valve.

Designed specifically for advanced fire protection systems and the latest industry standards.

The 42T reduces high upstream pressure to a precise, preset, stable downstream pressure.

Due to its exceptional reliability and low head loss the 42T is ideal for control of fire pump discharge.

It is also well-suited to prevent over-pressure in sprinklers, hose stations, and other discharge devices.

As an option the 42T can be fitted with a valve position indicator that can include a limit switch suitable for Fire & Gas monitoring systems.

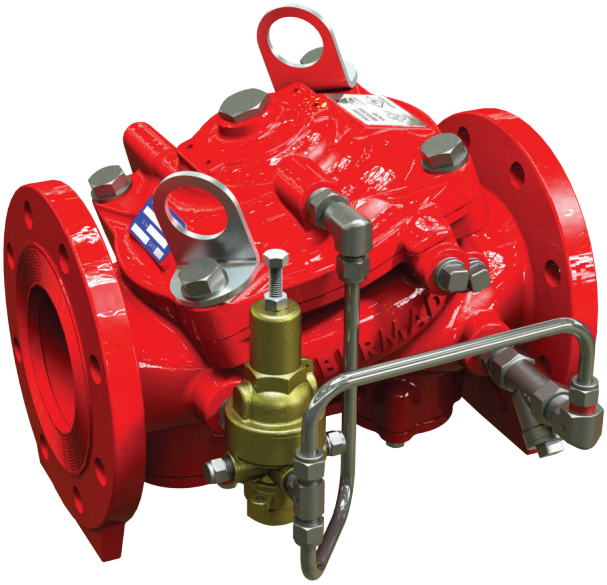

Benefits and Features

- **Safety and reliability**
  - Time-proven, simple, fail-safe actuation
  - Single piece, rugged, elastomeric diaphragm seal - VRSD technology
  - Obstacle-free, uninterrupted flow path
  - Suitable for pump discharge control, due to low headloss
  - No mechanical moving parts
- **High performance**
  - Fast, smooth stabilizing response to pressure fluctuations
  - Very high flow efficiency
  - Straight through Y - type body
  - Approved for PN25/365 psi
- **Specifically-designed for fire protection**
  - Face-to-face length standardized to ISO 5752 EN 558-1
  - Accurate and stabilizing pressure control
  - Meets the requirements of industry standards
- **Quick and easy maintenance**
  - In-line serviceable
  - Quick cover removal without detaching control trim

Approvals

c UL us LISTED	UL-Listed Special System Water Control Valves, Pressure Reducing (VLMT)
FM APPROVED	FM Approved Pressure Reducing Valves
DNV	Det Norske Veritas (Type Approval)
ABS TYPE APPROVAL PROGRAM	ABS American Bureau of Shipping Type Approval
Lloyd's Register	Lloyd's Register Type Approval

Typical Applications

- Sprinkler feed systems
- Fire pump discharge control
- Hose station supply
- Fire hydrant supply
- Foam systems
- Zonal pressure control

Additional Features

- Sea water compatibility
- Large control filter
- Stainless steel seat ring
- Integrated downstream relief valve
- Position limit switches

BERMAD

Operation

(for Illustration Only)

Valves 6" and Smaller

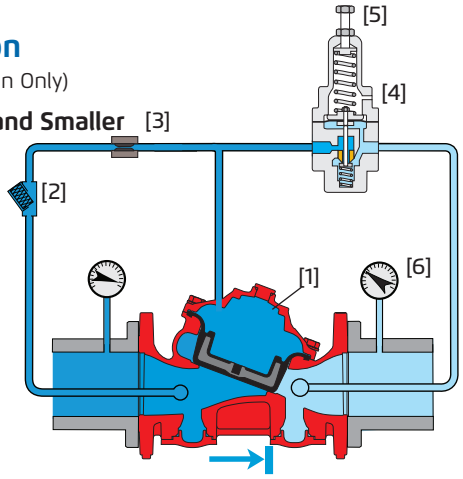

Valve Closed (non-flow conditions)

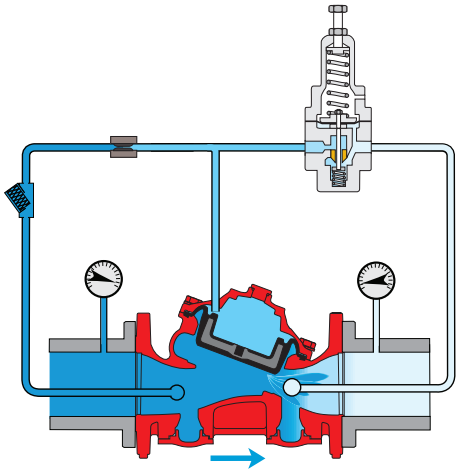

Valve Open (flow condition)

Valves 8" and Larger

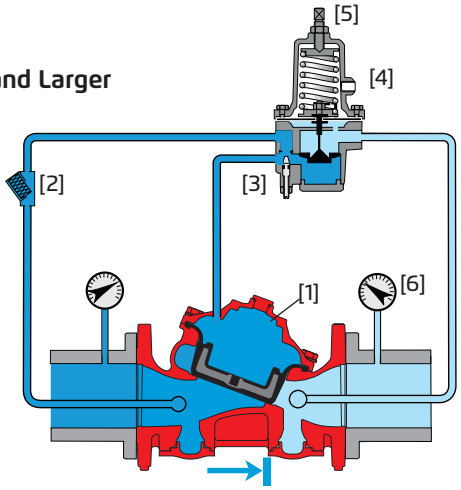

Valve Closed (non-flow conditions)

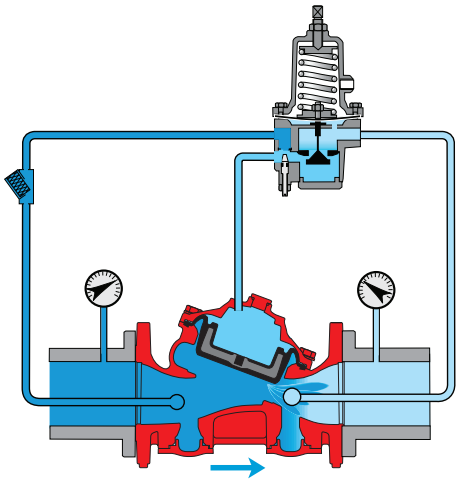

Valve Open (flow condition)

The BERMAD Model 42T pressure control valve, reduces water pressure automatically and accurately from a high inlet pressure to a lower, preset outlet pressure. The outlet set pressure can be adjusted by way of the pilot adjusting screw [5]. The valve operates under both flow and static conditions. The pressure-reducing pilot valve [4] senses changes in outlet pressure [6] and modulates the control valve to maintain the preset outlet pressure. When outlet pressure rises above the preset pressure , the pilot valve throttles, enabling pressure to accumulate in the control chamber [1], this causes the control valve to close further and reduce outlet pressure. When outlet pressure falls, the pilot valve opens wider, releasing pressure from the control chamber. This causes the control valve to open wider and increase outlet pressure. An integral restrictor [3] controls the valve's closing speed. For valves 8" and larger an adjustable needle valve is provided.

System P&ID

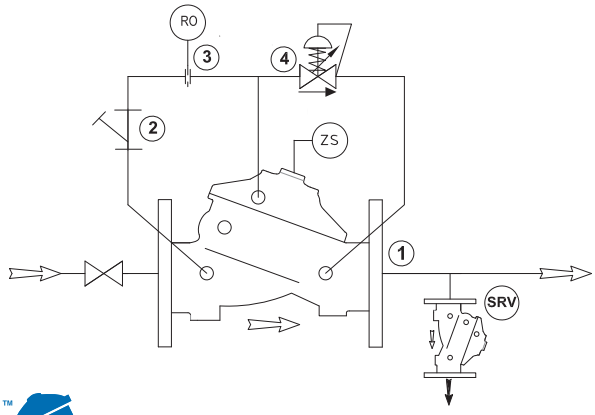

Components

1	BERMAD 400Y Water Control Valve
2	Y Strainer
3	Restriction Orifice
4	Pressure Reducing Pilot Valve

Optional System Items

ZS	Limit Switch Assembly
SRV	BERMAD 43T Pressure Relief Valve

System Installation

A typical installation of the BERMAD model 42T features a pilot valve for the automatic stable and accurate reduction of water pressure from a high upstream value to a preset lower downstream value, regardless of fluctuating upstream pressure or flow. A unique actuator design ensures quick and smooth valve action.

Installed singly, the 42T provides a standard pressure-reducing system. Installed in parallel, two 42T valves provide high flow rates, redundancy, and zero downtime for maintenance. Installed in series, two 42T valves can provide a two-stage, high reduction in pressure and/or added protection to a reduced-pressure zone.

To comply with the requirements outlined in the FM and UL standards, a pressure relief valve is to be installed on the downstream side of any approved or listed pressure reducing valve.

The BERMAD 43T Pressure Relief valve is ideally suited for this purpose, as shown in the installation illustrations.

For sizing the relief valve, see the Relief Valve Sizing table below. .

Relief Valve Sizing Table

42T Pressure Reducing Valve: inch (mm)	1.5"(40)	2"(50)	3"(80)	4"(100)	6"(150)	8"(200)	10"(250)	12"(300)	14"(350)	16"(400)
Recommended Relief Valve: inch (mm)	¾"(20)	¾"(20)	1½"(40)	2"(50)	3"(80)	3"(80)	4"(100)	4"(100)	4"(100)	4"(100)

Sprinkler System Pressure Reduction

- Reduces a high, unstable pressure supply to a preset, stable system pressure
- Sets the sprinkler pressure to suit the system design
- For zonal pressure control

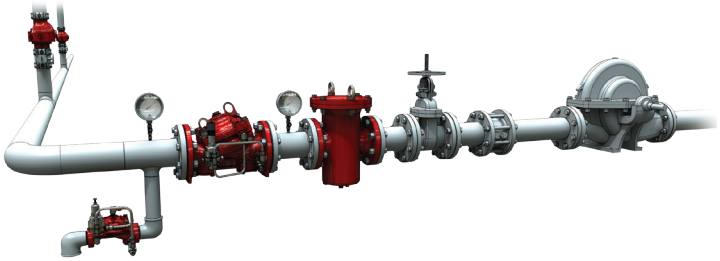

Hose System Pressure Reduction

- Reduces a high/unstable pressure supply to suit fire hose pressure
- Limits fire hose pressure to 7 bar (100 psi) to meet NFPA 14 regulations for maximum allowable hose pressure supply

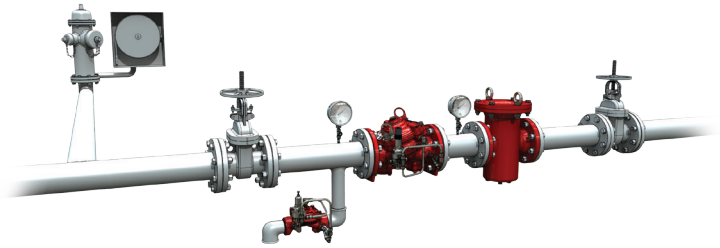

Two-Stage Pressure Reduction

- High pressure reduction to a low, preset, stable system pressure (when pressure reduction differential is more than 12 bar/175 psi)
- Backup pressure reducing valve in-line to a master valve to secure pressure zone rating at all times

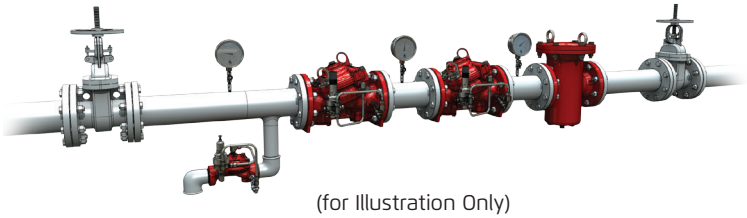

(for Illustration Only)

Engineer Specifications

The pressure reducing valve shall maintain a constant, preset, downstream pressure regardless of fluctuating upstream pressure or flow.

The valve shall be UL listed and FM approved, 25 bar/365 psi rated, line pressure driven and pilot operated.

It shall be of the elastomeric-type with a straight-through Y-type-body.

The valve shall have an unobstructed flow path with no stem guide or supporting ribs.

Valve actuation shall be accomplished by a single-piece, rolling diaphragm bonded with a rugged radial seal disc.

The diaphragm assembly shall be the only moving part.

Maintenance, inspection or service shall be carried out in-line and without disassembly of the control trim.

The control trim shall be supplied pre-assembled and hydraulically tested by a factory certified to ISO 9000 and 9001 standards.

BERMAD Fire Protection

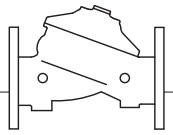

Model FP 400Y - 42T

400Y Series

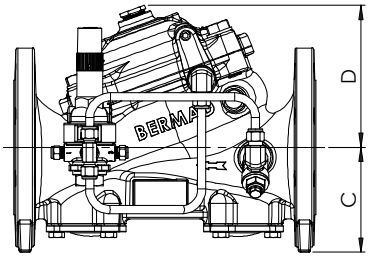

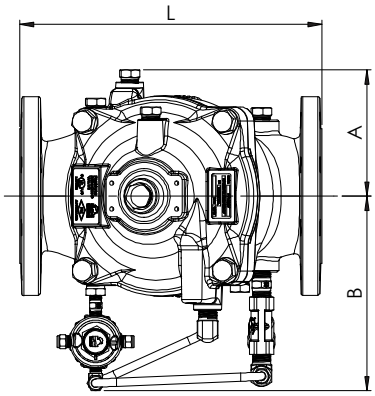

Technical Data

Available Sizes (inch)

- Flanged - 1½, 2, 3, 4, 6, 8, 10, 12, 14 & 16"
- Grooved - 1½, 2, 3, 4, 6 & 8"
- Threaded - 1½ & 2"

Pressure Rating

- ANSI#150 - 16 bar/235 psi
- ANSI#300 - 1½" to 10" 25 bar/365 psi
  12" to 16" 20 bar/300 psi
- Grooved - 25 bar/365 psi
- Setting range: 4 - 12 bar (60 - 175 psi)
- Max recommended pressure differential: 12 bar (175 psi) when normal inlet operation pressure is below 23 bar/330 psi
- Max recommended pressure differential: 14 bar (200 psi) when normal inlet operation pressure is above 23 bar/330 psi

Temperature Rating

- 60°C/140°F with NR elastomers
- 90°C/194°F with EPDM elastomers

Valve Size	1½" DN40	2" DN50	3" DN80	4" DN100	6" DN150	8" DN200	10" DN250	12" DN300	14" DN350	16" DN400
(1) L¹ ANSI #150 mm (in.)	230(9.06)	230(9.06)	310(12.21)	350(13.79)	480(18.91)	600(23.64)	730(28.76)	850(33.49)	980(38.61)	1100(43.34
L² ANSI #300 mm (in.)	230(9.06)	235(9.25)	326(12.84)	368(14.50)	506(19.94)	626(24.66)	730(28.76)	850(33.49)	980(38.61)	1100(43.34)
A mm (in.)	77.5(3)	77.5(3)	100(3.94)	115(4.53)	140(5.51)	172(6.77)	204(8)	242(9.53)	242(9.53)	242(9.53)
B mm (in.)	155(6.10)	155(6.10)	251(9.88)	266(10.47)	372(14.65)	490(19.29)	490(19.29)	656(25.83)	656(25.83)	656(25.83)
C mm (in.)	64(2.52)	77(3.03)	106(4.17)	121(4.76)	140(5.51)	172(6.77)	204(8.03)	247(9.72)	272(10.71)	316(12.44)
D mm (in.)	119(4.69)	119(4.69)	146(5.75)	158(6.22)	205(8.07)	256(10.08)	256(10.08)	441(17.36)	441(17.36)	441(17.36)
Kv m^3/h (Cv gpm)	68(79)	80(92)	190(219)	345(398)	790(912)	1160(1340)	1355(1565)	2370(2737)	2850(3292)	3254(3758)
(2) Leq m (ft)	2(7)	5(16)	7(23)	9(30)	15(49)	27(89)	62(203)	52(171)	59(194)	88(289)
Kg(lb) flanged#150/ISO16	11.5(25.3)	12.8(28.2)	27.5(60.5)	37.5(82.5)	81(178.2)	146(321.2)	176(387.2)	321(706.2)	354(778.8)	400(880)

Notes: (1) L1 Dimensions are for grooved, threaded and raised face flanged valves
(2) Leq (Equivalent Pipe Length) refers to a fully opened valve and turbulent flow in new steel pipe schedule 40, values given for general consideration only
(3) Dimensions for the trim envelope may vary with specific component positioning
(4) Kv/Cv values given for a fully opened valve

Valve Code Designations

FP | 6" | 42T | H | C | A5 | PR | NN | 6N

Category	Code
Standard	FP
Seawater	FS
Foam Concentrate	FC

Valve Size	
1½"	40 mm
2"	50 mm
3"	80 mm
4"	100 mm
6"	150 mm
8"	200 mm
10"	250 mm
12"	300 mm
14"	350 mm
16"	400 mm

Installation	Code
Horizontal/Vertical	H

Material Body & Cover (1)	Code
Ductile Iron A356 (2)	C
Steel ASTM A216 WCB (2)	S
Stainless Steel 316	N
Nickel Al Bronze C95800	U
Super Duplex Grade 5A	D

End Connections	Code
ANSI#150RF	A5
ANSI#150FF	A5
ANSI#300RF	A3
ISO PN16	16
ISO PN25	25
Grooved ANSI C606	VI

Coating	Code
Polyester Red	PR
High Build Epoxy	ER
Uncoated	UC

Tubing & Fittings	Code
Stainless Steel 316	NN
Monel	MM
Super Duplex	DD

Factory Fitted Options	Code
Pressure Gauge	6
Stainless Steel Glycerin Pressure Gauge Assembly	6n
Monel Pressure Gauge Assembly	6m
Special Elastomer EPDM	E1
Special Elastomer NBR	E3
Large Control Filter	F
Stainless Steel 316 Trim accessories	N
Pressure Transmitter	Q
Stainless Steel 316 Seat	T

Notes:
(1) Other materials available, see engineering data
(2) Coated internally and externally

info@bermad.com • www.bermad.com

© Copyright 2007-2012 Bermad CS Ltd. All Rights Reserved. The information contained in this document is subject to change without notice. BERMAD shall not be liable for any errors contained herein.

Rev.1 July 2016